Baumer
Passion for Sensors

Incremental encoders - combination

POG 10 G

Twin encoder with two electrically separated systems
Solid shaft with EURO flange B10 300…5000 pulses per revolution

Overview

- Twin encoder featuring two separate systems
- TTL output driver for cable length up to 550 m
- High resistance to shock and vibrations
- EURO flange B10 / solid shaft ø11 mm
- Large terminal boxes, turn by 180°

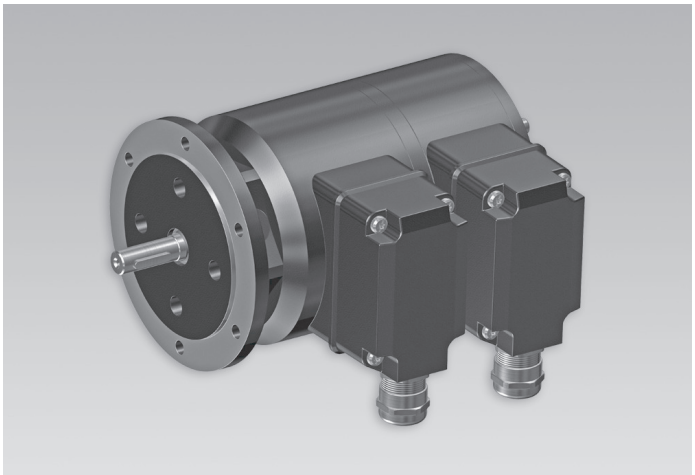

HTL TTL® B10® HUBNER BERLIN A Baumer Brand

Technical data

Technical data - electrical ratings

Voltage supply	9...30 VDC 5 VDC ±5 %
Consumption w/o load	≤100 mA
Pulses per revolution	300 … 5000
Phase shift	90 ° ±20°
Duty cycle	40…60 %
Reference signal	Zero pulse, width 90°
Output frequency	≤120 kHz ≤300 kHz (on request)
Output signals	K1, K2, K0 + inverted Error output (option EMS)
Output stages	HTL-P (power linedriver) TTL/RS422
Sensing method	Optical
Interference immunity	EN 61000-6-2
Emitted interference	EN 61000-6-3
Approval	CE UL approval / E217823

Technical data - mechanical design

Size (flange)	ø115 mm
Shaft type	ø11 mm solid shaft
Admitted shaft load	≤300 N axial ≤450 N radial

Technical data - mechanical design

Flange	EURO flange B10
Protection DIN EN 60529	IP 66
Operating speed	≤12000 rpm (mechanical)
Operating torque typ.	2 Ncm
Rotor moment of inertia	212 gcm²
Material	Housing: aluminium die-cast Shaft: stainless steel
Operating temperature	-40...+100 °C -25...+100 °C (>3072 pulses)
Resistance	IEC 60068-2-6 Vibration 20 g, 10...2000 Hz IEC 60068-2-27 Shock 200 g, 6 ms
Corrosion protection	IEC 60068-2-52 Salt mist for ambient conditions C4 according to ISO 12944-2
Explosion protection	II 3 G Ex nA IIC T4 Gc (gas) II 3 D Ex tc IIIC T135°C Dc (dust)
Connection	2x terminal box 3x terminal box (with option M)
Weight approx.	2,5 kg 2,7 kg (with option M)

Optional

- Function control with EMS (Enhanced Monitoring System)
- Redundant sensing with two terminal boxes
- Housing foot (B3)

2020-02-18 The product features and technical data specified do not express or imply any warranty. Technical modifications subject to change.

POG 10 G

Twin encoder with two electrically separated systems
Solid shaft with EURO flange B10 300…5000 pulses per revolution

Terminal assignment

View A *(see dimension)*
Connecting terminal terminal box, radial

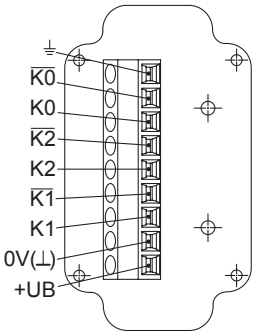

Option EMS: View A *(see dimension)*
Connecting terminal terminal box, radial

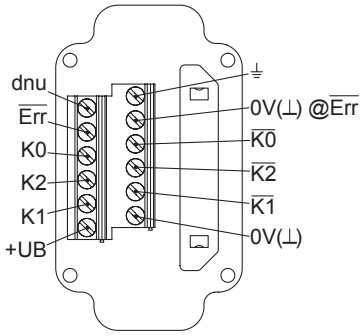

Terminal significance

Encoder incremental

+UB	Voltage supply
0V (⊥)	Ground
⏚	Earth ground (housing)
K1	Output signal channel 1
$\overline{K1}$	Output signal channel 1 inverted
K2	Output signal channel 2 (offset by 90° to channel 1)
$\overline{K2}$	Output signal channel 2 inverted
K0	Zero pulse (reference signal)
$\overline{K0}$	Zero pulse inverted
$\overline{Err}$	Error output (option EMS)
dnu	Do not use

Output signals

HTL/TTL
At positive rotating direction *(see dimension)*

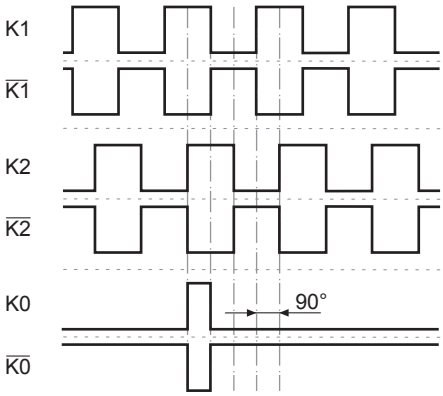

Option EMS (Enhanced Monitoring System): Status LED / error output

Flash light red*	Error of signal sequenze, zero pulse or pulses (Error output = HIGH-LOW alternation)
Red	Overload output transistors (Error output = LOW)
Flash light green	Device o.k., rotating (Error output = HIGH)
Green	Device o.k., stopped (Error output = HIGH)
No light	No voltage supply connection or wrong connection (Error output = LOW)

* Only at rotating device

2020-02-18 The product features and technical data specified do not express or imply any warranty. Technical modifications subject to change.

POG 10 G

Twin encoder with two electrically separated systems
Solid shaft with EURO flange B10 300…5000 pulses per revolution

Dimensions

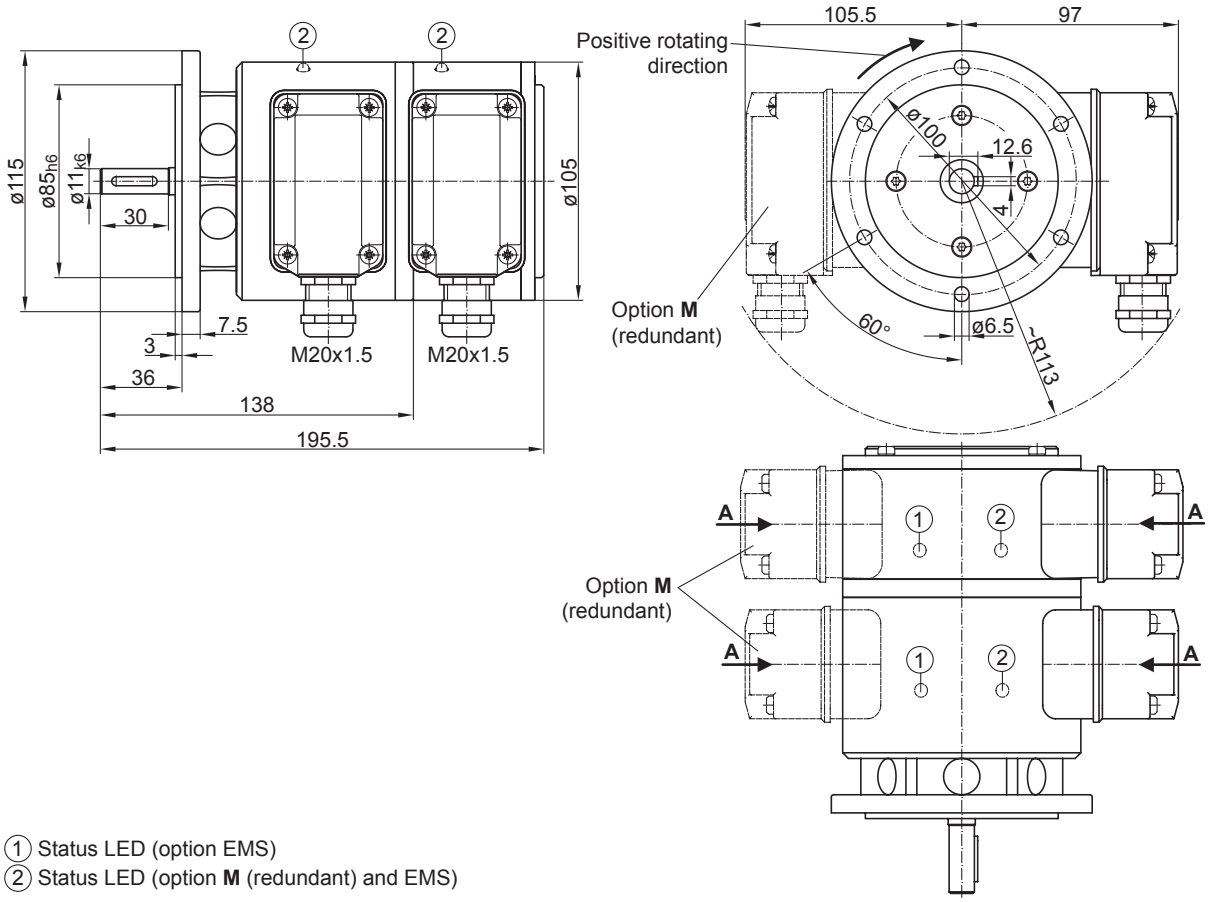

① Status LED (option EMS)
② Status LED (option **M** (redundant) and EMS)

EURO flange B10

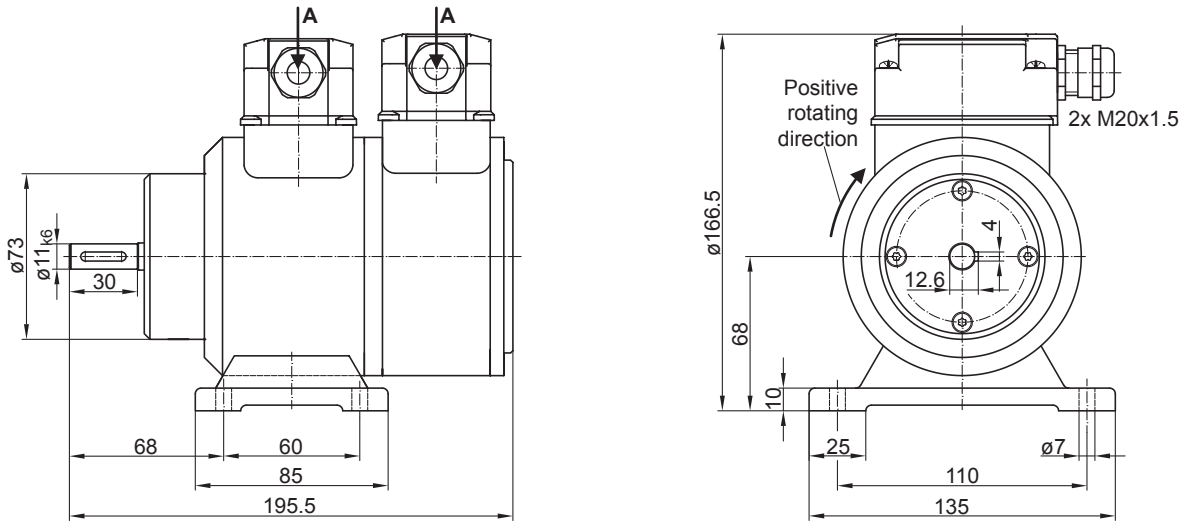

Housing foot B3

2020-02-18 The product features and technical data specified do not express or imply any warranty. Technical modifications subject to change.

POG 10 G

Twin encoder with two electrically separated systems
Solid shaft with EURO flange B10 300…5000 pulses per revolution

Ordering reference

	POG10	##	G	#	DN	####	###	/	DN	####	###	######
Product												
Twin encoder	POG10											
EMS - Enhanced Monitoring System												
Without EMS												
With EMS		.2										
Redundant encoder												
With redundant encoder			G									
Redundant sensing												
Without redundant sensing												
With redundant sensing				M								
Output signals												
K1, K2, K0					DN							
Pulse number[1]												
300						300						
500						500						
512						512						
1000						1000						
1024						1024						
1200						1200						
2048						2048						
2500						2500						
3072						3072						
4096						4096						
5000						5000						
Voltage supply / output stage												
9...30 VDC / output stage HTL with inverted signals							I					
5 VDC / output stage TTL with inverted signals							TTL					
9...30 VDC / output stage TTL with inverted signals							R					
Output signals (G)												
K1, K2, K0									DN			
Pulse number (G)[1]												
300										300		
500										500		
512										512		
1000										1000		
1024										1024		
1200										1200		
2048										2048		
2500										2500		
3072										3072		
4096										4096		
5000										5000		
Voltage supply / output stage (G)												
9...30 VDC / output stage HTL with inverted signals											I	
5 VDC / output stage TTL with inverted signals											TTL	
9...30 VDC / output stage TTL with inverted signals											R	
Mounting type												
EURO flange B10												
Housing foot B3												B3

The product features and technical data specified do not express or imply any warranty. Technical modifications subject to change.
2020-02-18

POG 10 G

Twin encoder with two electrically separated systems
Solid shaft with EURO flange B10 300…5000 pulses per revolution

Ordering reference

(1) Other pulse numbers on request.

Accessories

Mounting accessories	
	Spring disk coupling K 35 (shaft ø6...12 mm)
	Spring disk coupling K 50 (shaft ø11...16 mm)
	Spring disk coupling K 60 (shaft ø11...22 mm)

Connectors and cables	
	Sensor cable for encoders HEK 8

Diagnostic accessories	
11075858	Analyzer for encoders HENQ 1100
11075880	Analyzer for encoders HENQ 1100 with a power pack

2020-02-18 The product features and technical data specified do not express or imply any warranty. Technical modifications subject to change.