Baumer
Passion for Sensors

Incremental encoders - combination

POG 10 + DSL

Encoder with integrated programmable, digital speed switch

Solid shaft with EURO flange B10 and/or housing foot B3 512...2500 pulses per revolution

Overview

- Freely programmable on and off switching speed
- Programming via included software (RS485 interface)
- TTL or HTL, 512...2500 pulses per revolution
- EURO flange B10 and/or housing foot B3 / solid shaft ø11 mm
- DSL.R: 3 outputs speed controlled (independent transistor outputs)
- DSL.E: 2 outputs speed controlled and 1 control output

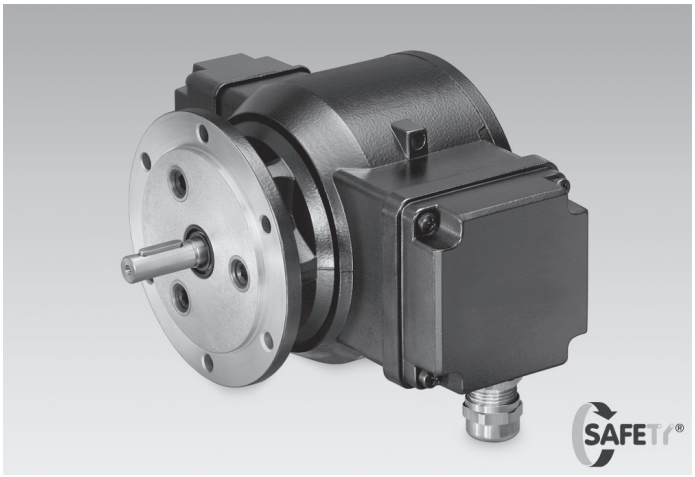

HUBNER BERLIN
A Baumer Brand

Technical data

Technical data - electrical ratings	
Voltage supply	With DSL.R: 15...30 VDC With DSL.E: 9...30 VDC
Consumption w/o load	≤200 mA
Sensing method	Optical
Technical data - electrical ratings (encoder)	
Pulses per revolution	512 … 2500
Phase shift	90 ° ±20°
Duty cycle	40…60 %
Reference signal	Zero pulse, width 90°
Output frequency	≤120 kHz
Output signals	K1, K2, K0 + inverted
Output stages	HTL TTL/RS422
Technical data - electrical ratings (speed switches)	
Interface	RS485
Switching accuracy	± 2 % (or Digit)
Switching outputs	With DSL.R: 3 outputs, speed control With DSL.E: 2 outputs, speed control and 1 control output
Output switching capacity	With DSL.R: 12 VDC; ≤40 mA With DSL.E: 5...230 VAC/VDC; 5...250 mA
Switching delay time	≤40 ms
Technical data - mechanical design	
Size (flange)	ø115 mm
Shaft type	ø11 mm solid shaft
Admitted shaft load	≤300 N axial ≤450 N radial

Technical data - mechanical design	
Flange	EURO flange B10 Housing foot B3
Protection DIN EN 60529	IP 66
Speed (n)	≤6000 rpm
Range of switching speed (ns)	Pulses = 512: ±16...6000 rpm Pulses = 1024: ±8...6000 rpm Pulses = 2048: ±4...3500 rpm Pulses = 2500: ±3...2900 rpm
Operating torque	≤2 Ncm
Rotor moment of inertia	290 gcm²
Material	Housing: aluminium Shaft: stainless steel
Operating temperature	-30...+85 °C
Resistance	IEC 60068-2-6 Vibration 20 g, 10...2000 Hz IEC 60068-2-27 Shock 200 g, 6 ms
Corrosion protection	IEC 60068-2-52 Salt mist for ambient conditions C4 according to ISO 12944-2
Explosion protection	II 3 G Ex nA IIC T4 Gc (gas) II 3 D Ex tc IIIC T135°C Dc (dust)
Connection	Terminal box
Weight approx.	3,3 kg
Interference immunity	EN 61000-6-2
Emitted interference	EN 61000-6-3
Approval	CE

Optional

- Relay module DS 93 R (DSL.R version only)

2020-02-17 The product features and technical data specified do not express or imply any warranty. Technical modifications subject to change.

POG 10 + DSL

Encoder with integrated programmable, digital speed switch

Solid shaft with EURO flange B10 and/or housing foot B3 512...2500 pulses per revolution

Terminal assignment

View A *(see dimension)*
Connecting terminal terminal box encoder

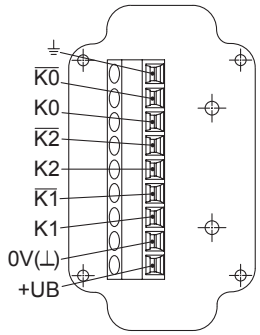

View B *(see dimension)*
Connecting terminal speed switch DSL.R

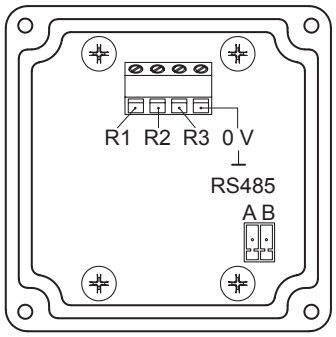

View B *(see dimension)*
Connecting terminal speed switch DSL.E

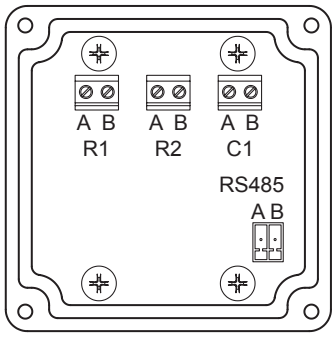

Terminal significance

Encoder incremental

+UB	Voltage supply
0V (⊥)	Ground
⏚	Earth ground (housing)
K1	Output signal channel 1
$\overline{K1}$	Output signal channel 1 inverted
K2	Output signal channel 2 (offset by 90° to channel 1)
$\overline{K2}$	Output signal channel 2 inverted
K0	Zero pulse (reference signal)
$\overline{K0}$	Zero pulse inverted

Speed switch DSL.R

R1*	Transistor switching output 1, individually adjustable switching speed, High (12 V), Low (0 V), max. 20 mA
R2*	Transistor switching output 2, individually adjustable switching speed, High (12 V), Low (0 V), max. 20 mA
R3*	Transistor switching output 3, individually adjustable switching speed, High (12 V), Low (0 V), max. 20 mA
GND*	Ground connection
RS485	Interface for PC or Laptop (adapter required). Programming of the DSL via the included software.

* Connection to relay module, for example DS 93 R (accessory)

Speed switch DSL.E

R1 (A+B)	Electronic relay output 1, individually adjustable switching speed, 5...230 V AC/DC
R2 (A+B)	Electronic relay output 2, individually adjustable switching speed, 5...230 V AC/DC
C1 (A+B)	Electronic relay output as a control output, 5...250 mA
RS485	Interface for PC or Laptop (adapter required). Programming of the DSL via the included software.

Output signals

HTL/TTL
At positive rotating direction *(see dimension)*

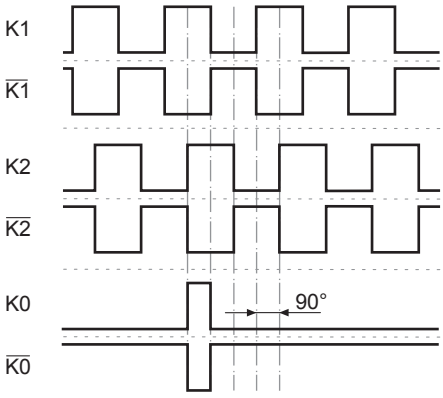

2020-02-17 The product features and technical data specified do not express or imply any warranty. Technical modifications subject to change.

POG 10 + DSL

Encoder with integrated programmable, digital speed switch

Solid shaft with EURO flange B10 and/or housing foot B3 512...2500 pulses per revolution

Block circuit diagram

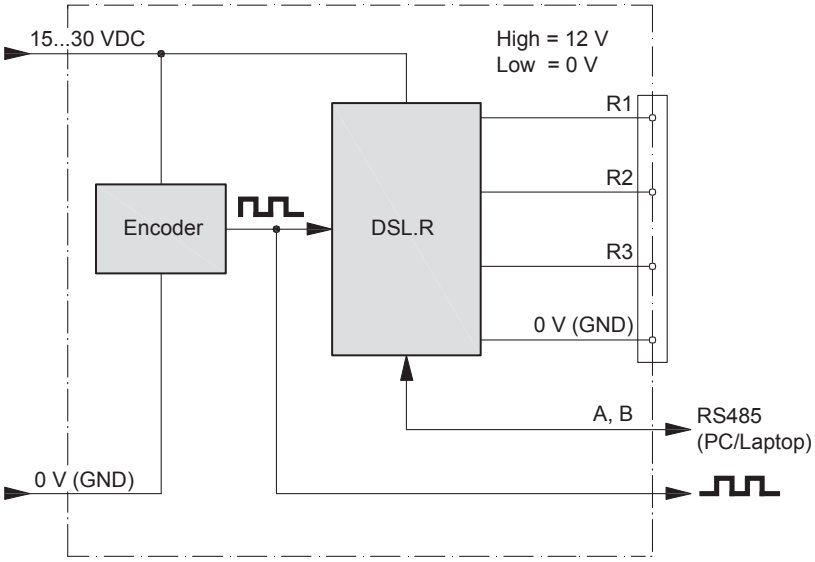

Switching characteristics

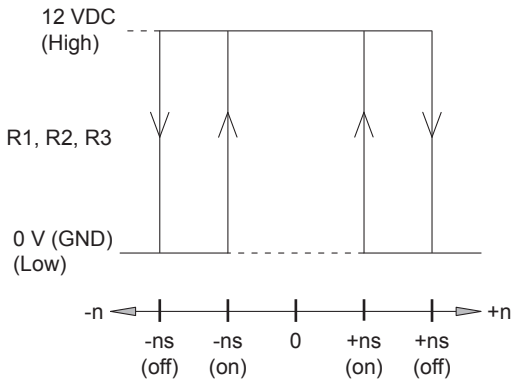

n = speed
ns (on) = adjusted switching on speed
ns (off) = adjusted switching off speed

Speed switch DSL.R

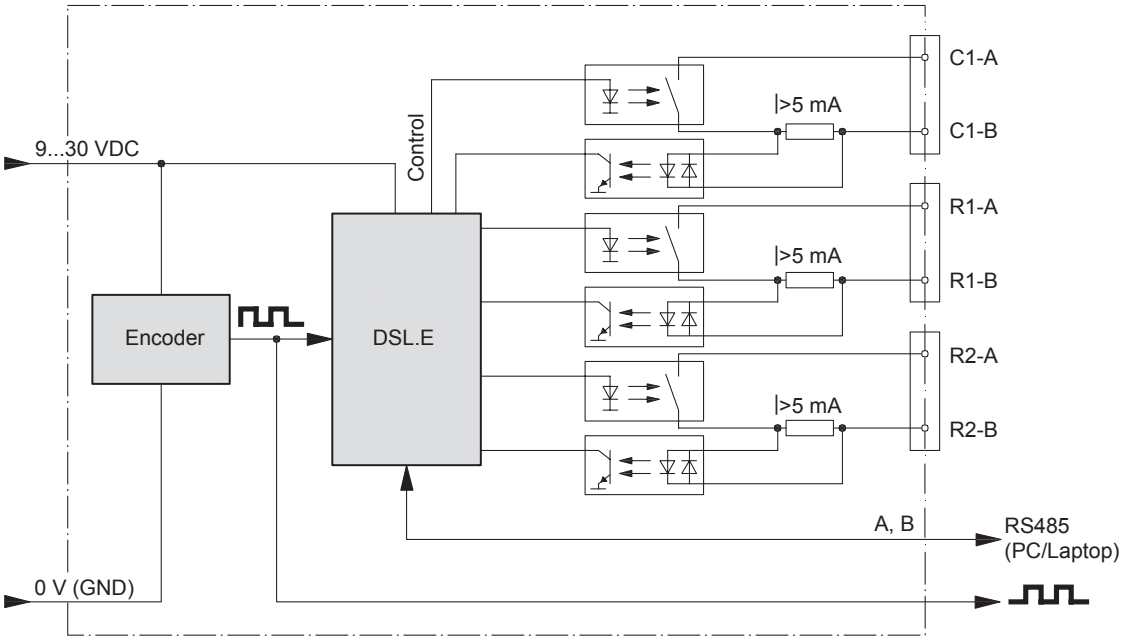

Speed switch DSL.E

2020-02-17 The product features and technical data specified do not express or imply any warranty. Technical modifications subject to change.

POG 10 + DSL

Encoder with integrated programmable, digital speed switch

Solid shaft with EURO flange B10 and/or housing foot B3 512...2500 pulses per revolution

Dimensions

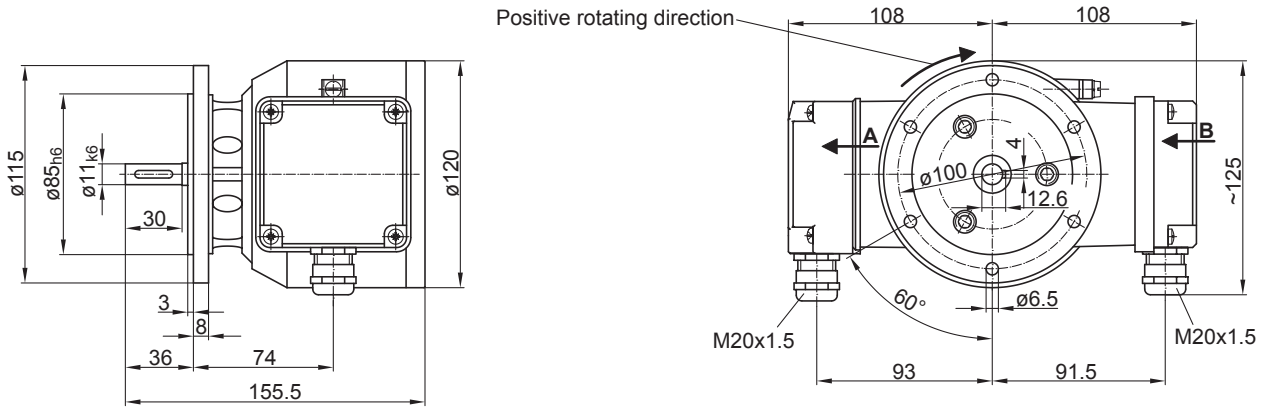

EURO flange B10

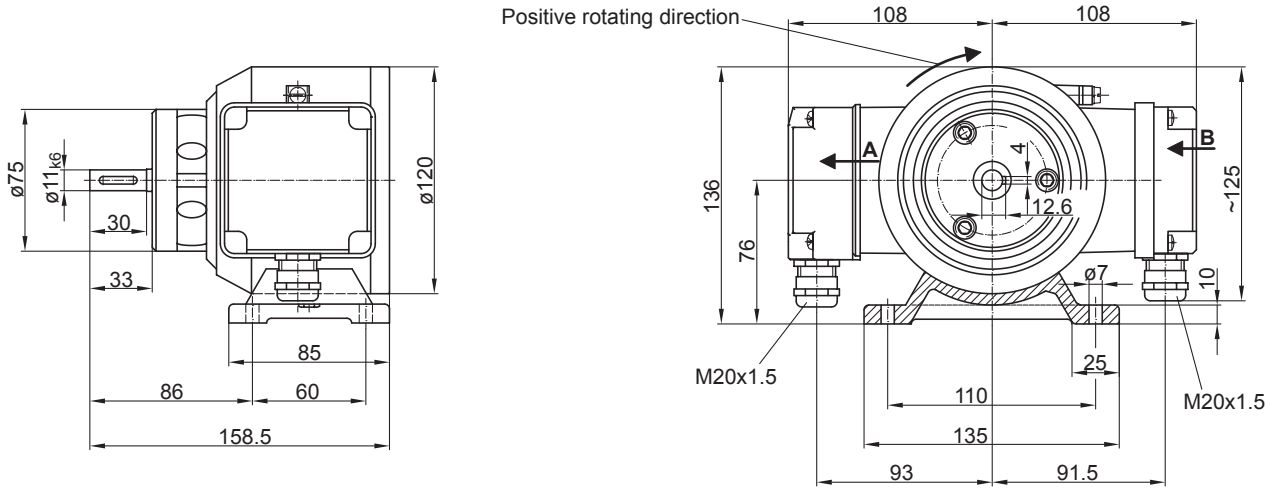

Housing foot B3

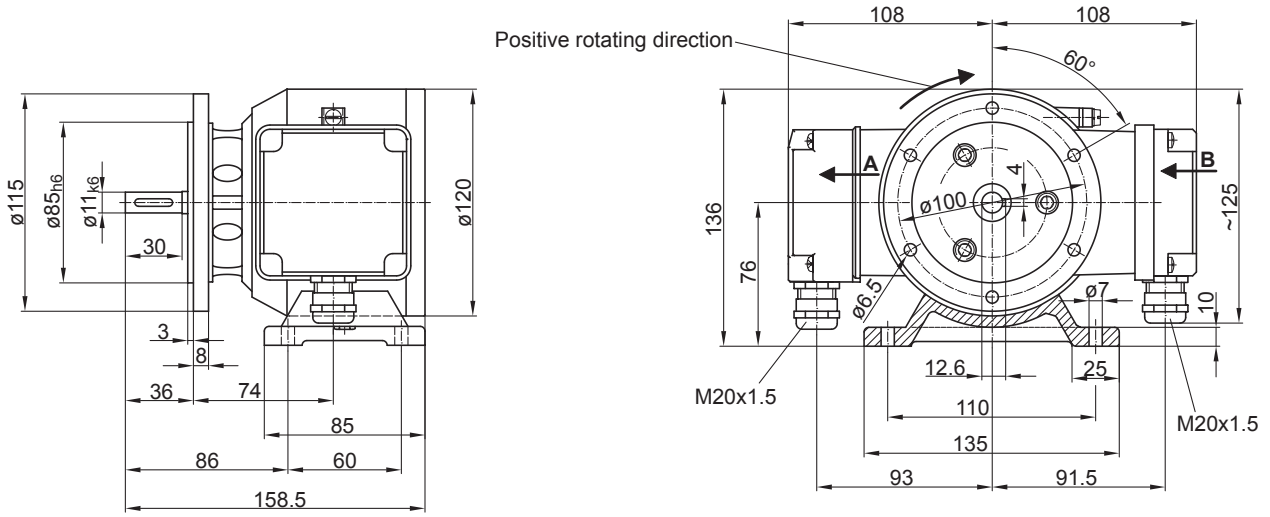

EURO flange B10 and housing foot B3

2020-02-17 The product features and technical data specified do not express or imply any warranty. Technical modifications subject to change.

POG 10 + DSL

Encoder with integrated programmable, digital speed switch
Solid shaft with EURO flange B10 and/or housing foot B3 512...2500 pulses per revolution

Ordering reference

	POG10	DN	####	#	######	######
Product						
Incremental encoder + Speed switch	POG10					
Output signals						
K1, K2, K0		DN				
Pulse number						
512			512			
1024			1024			
2048			2048			
2500			2500			
Incremental output						
Output circuit HTL with inverted signals				I		
Output circuit TTL with inverted signals				R		
Mounting type						
EURO flange B10						
Housing foot B3					B3	
Housing foot B3 + EURO flange B10					B3/B10	
Version speed switch						
2 outputs, speed control and 1 control output						+ DSL.E
3 outputs, speed control						+ DSL.R

Accessories

Mounting accessories	
	Spring disk coupling K 35 (shaft ø6...12 mm)
	Spring disk coupling K 50 (shaft ø11...16 mm)
	Spring disk coupling K 60 (shaft ø11...22 mm)

Connectors and cables	
	Sensor cable for encoders HEK 8
11064248	USB → RS485 converter
11117345	USB → RS485 converter with connecting cable for DSL

Diagnostic accessories	
11075858	Analyzer for encoders HENQ 1100
11075880	Analyzer for encoders HENQ 1100 with a power pack

2020-02-17 The product features and technical data specified do not express or imply any warranty. Technical modifications subject to change.